SLUICE VALVE NOTES:

1. ALL DIMENSIONS IN MILLIMETRES (mm) UNLESS NOTED OTHERWISE.
2. SLUICE VALVE CHAMBERS SHALL BE COVERED WITH APPROVED HEAVY DUTY METAL COVERS TO IS 261 AND BS 5834. COVER AND FRAME SHALL BE SUITABLE FOR ROAD AND TRAFFIC CONDITIONS AND IS SUBJECT TO THE APPROVAL OF IRISH WATER.
3. SLUICE VALVES SHALL BE RESILIENT SEATED AND SHALL COMPLY WITH BS 5163–1, BS 5163–2, IS EN 1074–1, IS EN 1074–2 OR EQUIVALENT E.U SPECIFICATIONS
4. ALL SLUICE VALVES SHALL BE ANTI CLOCKWISE CLOSING.
5. VALVE CHAMBER TO BE CONSTRUCTED OF PRECAST CONCRETE UNITS OR HIGH DENSITY BLOCKWORK. ALTERNATIVELY PROPRIETARY PREFABRICATED CHAMBER UNITS MAY ALSO BE USED, SUBJECT TO APPROVAL FROM IRISH WATER.
6. CONCRETE CHAMBERS SHALL BE SURROUNDED BY A MINIMUM OF 150mm COMPACTED CLAUSE 808 MATERIAL AS PER STD–W–13.
7. DUCTILE IRON PIPES AND FITTINGS TO BE IN ACCORDANCE WITH IS EN 545. PE PIPES AND FITTINGS TO BE IN ACCORDANCE WITH IS EN 12201:2011
8. 200mm ALL AROUND, 100mm DEEP CONCRETE PLINTH WITH PROTECTIVE STAINLESS STEEL METAL BAND AROUND COVER IN GREEN AREAS.
9. THRUST BLOCKS (NOT SHOWN ON DRAWING), TO BE PROVIDED AS PER STANDARD DRAWING STD–W–28 AT ALL TEES, BENDS, TAPERS, DEAD ENDS AND PIPES AT STEEP SLOPES.
10. ANTI–CORROSION TAPE TO BE PROVIDED AROUND BURIED FLANGES.
11. ALL CONCRETE TO BE IN ACCORDANCE WITH IS EN 206.

HYDRANT NOTES:

1. ALL DIMENSIONS IN MILLIMETRES (mm) UNLESS NOTED OTHERWISE.
2. HYDRANT CHAMBERS SHALL BE COVERED WITH APPROVED HEAVY DUTY METAL COVERS TO IS EN 261 AND BS 5834 COVER AND FRAME SHALL BE SUITABLE FOR ROAD AND TRAFFIC CONDITIONS AND IS SUBJECT TO THE APPROVAL OF IRISH WATER.
3. ALL HYDRANTS, SURFACE BOX FRAMES & COVERS SHALL COMPLY WITH THE RELEVANT PROVISIONS OF IS EN 14339, IS EN 1074–6 & BS750. FIRE HYDRANTS SHALL BE TYPE 2. THE HYDRANT INLET SHALL BE 80mm DIAMETER WITH PN16.
4. ALL HYDRANTS SHALL BE CLOCKWISE CLOSING.
5. HYDRANT CHAMBER TO BE CONSTRUCTED OF PRECAST CONCRETE UNITS OR HIGH DENSITY BLOCKWORK. ALTERNATIVELY PROPRIETARY PREFABRICATED CHAMBER UNITS MAY ALSO BE USED, SUBJECT TO APPROVAL FROM IRISH WATER
6. CONCRETE CHAMBERS SHALL BE SURROUNDED BY A MINIMUM OF 150mm COMPACTED CLAUSE 808 MATERIAL AS PER STD–W–13.
7. DUCTILE IRON PIPES AND FITTINGS TO BE IN ACCORDANCE WITH IS EN 545. PE PIPES AND FITTINGS TO BE IN ACCORDANCE WITH IS EN 12201:2011.
8. 200mm ALL AROUND, 100mm DEEP CONCRETE PLINTH WITH PROTECTIVE STAINLESS STEEL METAL BAND AROUND COVERS IN GREEN AREAS.
9. THRUST BLOCKS (NOT SHOWN ON DRAWING), TO BE PROVIDED AS PER STANDARD DRAWING STD–W–28 AT ALL TEES, BENDS, TAPERS, DEAD ENDS AND PIPES AT STEEP SLOPES.
10. ANTI CORROSION TAPE TO BE PROVIDED AROUND BURIED FLANGES.
11. ALL CONCRETE TO BE IN ACCORDANCE WITH IS EN 206.

Dimensions and details										
Box Type	A(min)	A(min)	B	C	D	E	F	G	H	Weight
Standard Unit (20mm, 25mm and 32mm connections)	499mm	870mm	208mm	151mm	20mm	112mm	170mm	173mm	225mm	4.5kg
Short Units	310mm	545mm	208mm	151mm	20mm	112mm	170mm	173mm	225mm	3.4kg
Matrix can be supplied to suit imperial pipes including Irish heavy gauge and normal gauge imperial pipes.										

NOTES:

1. DO NOT SCALE. USE FIGURED DIMENSIONS ONLY.
2. THIS DRAWING IS TO BE READ IN CONJUNCTION WITH ALL OTHER RELEVANT ARCHITECTURAL AND ENGINEERING DRAWINGS.
3. WATERMAINS SHALL BE LAID IN ACCORDANCE WITH THE LOCAL AUTHORITY / IRISH WATER SPECIFICATION FOR THE LAYING OF NEW WATERMAINS AND BYLAWS WHICH OVER–RIDE THESE NOTES. THE CONSTRUCTION OF THE WATERMAIN SHALL BE IN ACCORDANCE WITH THE BEST CURRENT PRACTICE AND THE LATEST EDITIONS OF THE RELEVANT STANDARDS AND CODES OF PRACTICE.
4. WATERMAINS SHALL NOT BE LAID UNDER WALLS OR AREAS DESIGNATED FOR TREES/SHRUBS/FLOWERS.
5. PIPES SHALL BE HDPE (BLUE PIPE) UNLESS NOTED OTHERWISE BY AGREEMENT WITH THE LOCAL AUTHORITY. DUCTILE IRON PIPES SHALL BE USED UNDER ROADS OF CLASSIFICATION "DISTRICT DISTRIBUTOR" UPWARDS UNLESS NOTED OTHERWISE.
6. PIPES SHALL CONFORM TO THE UK WATER INDUSTRY SPECIFICATION OR EQUIVALENT E.U. SPECIFICATION.
7. DUCTILE IRON (DI) PIPES SHALL CONFORM TO IS EN 545 AND SHALL HAVE MINIMUM C40 PRESSURE RATING. DUCTILE IRON FITTINGS SHALL HAVE 16 BAR RATING AT LEAST DI PIPEWORK SHALL BE COATED INTERNALLY WITH A BLAST FURNACE CEMENT LINING WHICH COMPRISES WITH THE REQUIREMENTS OF BS 6920. EXTERNAL PROTECTION SHALL INCLUDE AN ALLOY OF 70NC AND ALUMINUM WITH A MINIMUM 15% ALUMINUM WITH OR WITHOUT OTHER MATERIALS HAVING A MASS OF 400g/m² COMPETE WITH A FINISHING LAYER OF BLUE FUSION BONDED EPOXY IN ACCORDANCE WITH IS EN 14901.
8. WATERMAINS SHALL BE LAID UNDER FOOTPATHS PREFERABLY OR GRASS MARGINS WHERE APPROVED. NO PIPE, CONDUIT, CABLE OR OTHER SERVICE SHALL BE LAID LONGITUDINALLY OVER THE LINE OF A WATERMAIN. NO CABINET POLES, JUNCTION BOXES OR CHAMBERS SHALL BE CONSTRUCTED OVER A WATERMAIN.
9. THE MINIMUM COVER TO A WATERMAIN SHALL BE 750mm, THE MAXIMUM COVER SHALL BE 900mm UNLESS NOTED OTHERWISE.
11. CONNECTIONS TO THE MAINS WHICH ARE THE PROPERTY OF THE IRISH WATER CAN BE MADE BY THE IRISH WATER ONLY. NO OTHER PERSON MAY INTERFERE IN ANY WAY WITH THESE MAINS. SUCH CONNECTIONS WILL BE MADE BY IRISH WATER AT THE EXPENSE OF THE PERSONS REQUIRING THEM. THE ESTIMATED COST OF SUCH CONNECTIONS MUST BE LODGED WITH IRISH WATER BEFORE THE WORK IS UNDERTAKEN.
12. IT IS THE CONTRACTORS RESPONSIBILITY TO ENSURE THAT ALL WORKS ARE CONSTRUCTED IN ACCORDANCE WITH THE IRISH WATER CODE OF PRACTICE AND STANDARD DETAILS. THE CODE OF PRACTICE AND STANDARD DETAILS ARE AVAILABLE TO DOWNLOAD FROM THE IRISH WATER WEB SITE AT WWW.WATER.IE/CONNECTIONS/DEVELOPER–SERVICES/ WHERE THE DETAILS CONTAINED ON THIS DRAWING DIFFER FROM THE IRISH WATER CODE OF PRACTICE OR STANDARD DETAILS THIS MUST BE BROUGHT TO THE ATTENTION OF THE ENGINEER IMMEDIATELY. IRISH WATER STANDARDS WILL TAKE PRECEDENCE

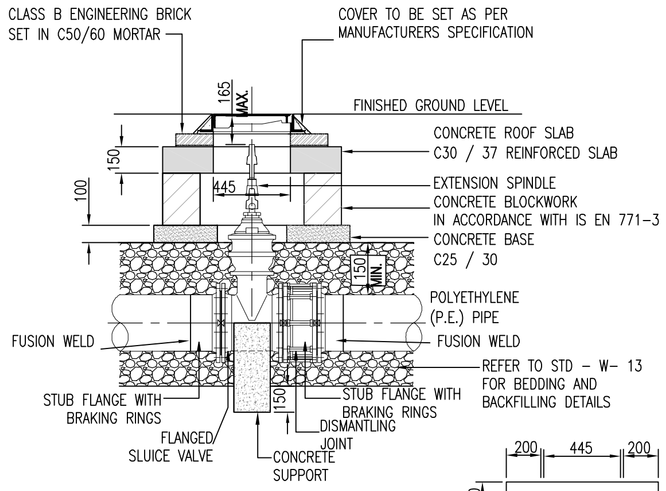

SLUICE VALVE CHAMBER SECTION

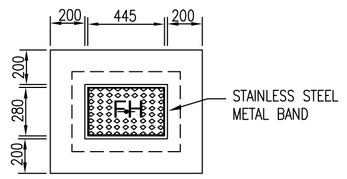

PLINTH DETAIL IN GRASS AREA

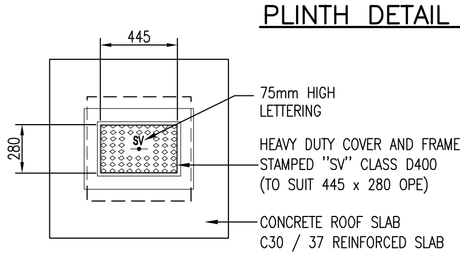

SLUICE VALVE CHAMBER ROOF PLAN

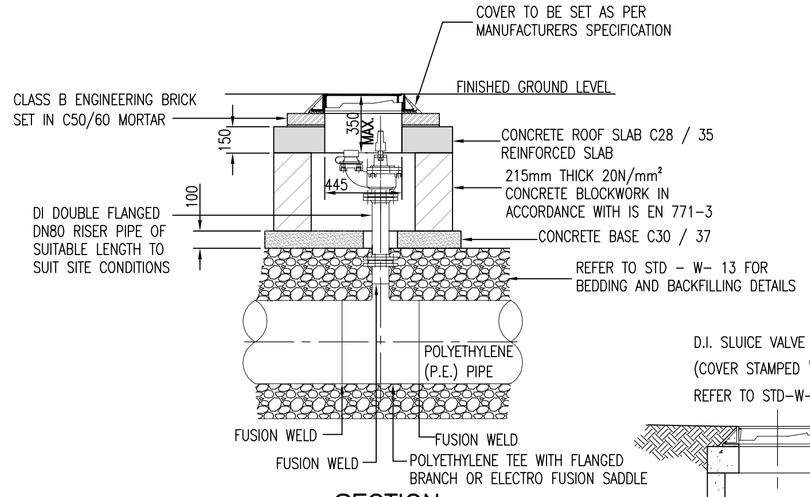

SECTION
(SCALE 1:25)

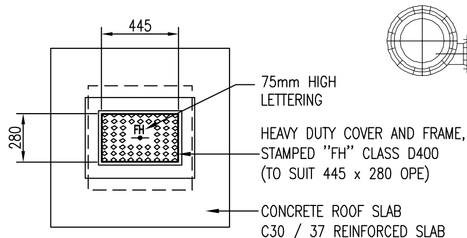

ROOF PLAN

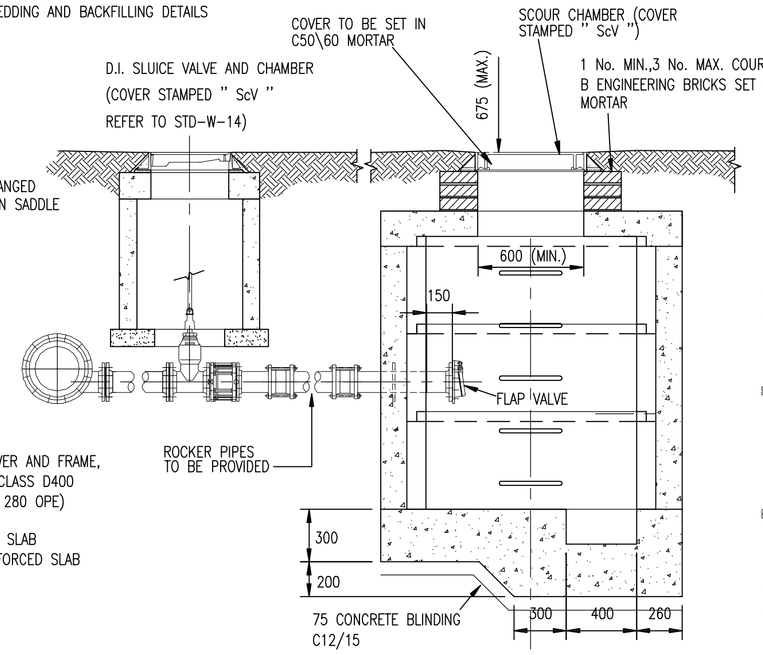

SCOUR VALVE SECTION DETAILS

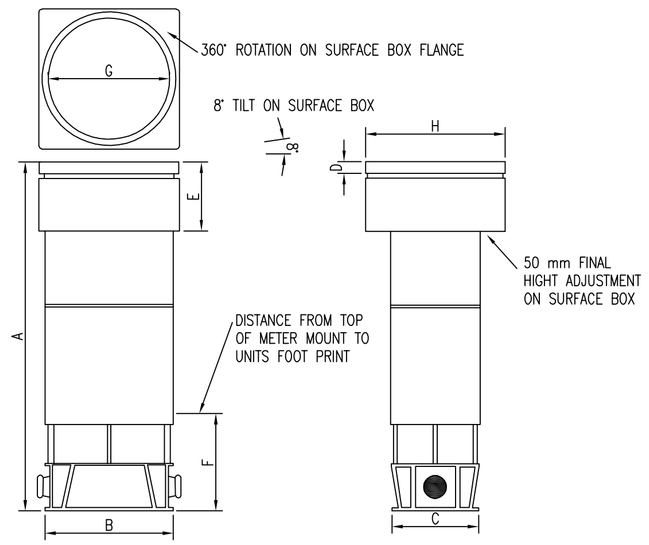

PROPOSED WATER SUPPLY BOUNDARY BOX DETAILS

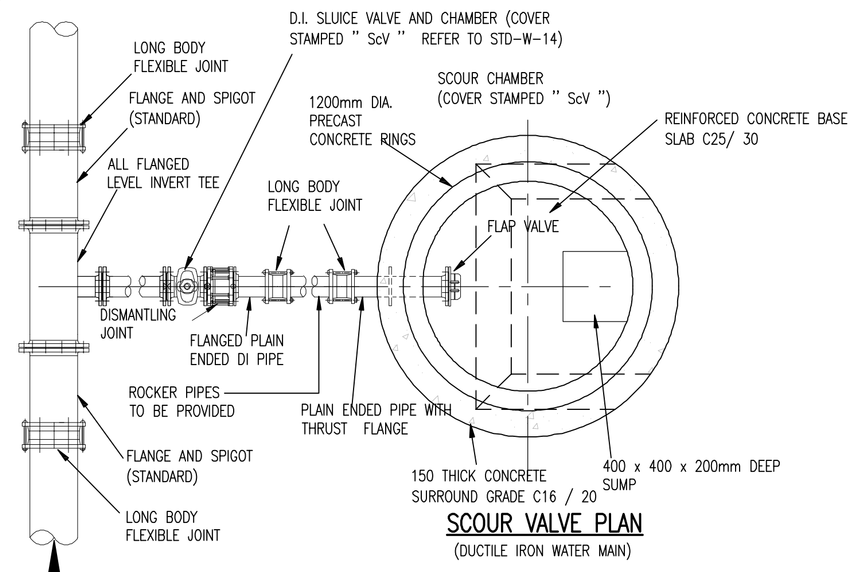

SCOUR VALVE PLAN
(DUCTILE IRON WATER MAIN)

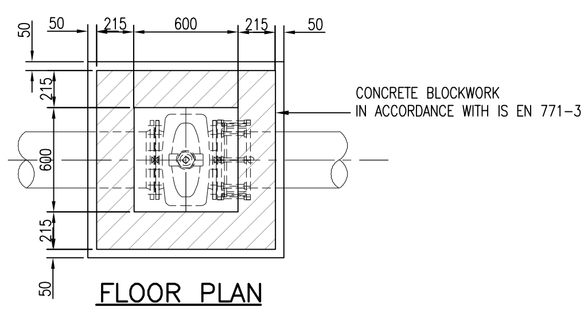

FLOOR PLAN
SLUICE VALVE CHAMBER FOR POLYETHYLENE (PE) PIPE (BLOCKWORK CONSTRUCTION)
(SCALE 1:25)

(SCALE 1:25)

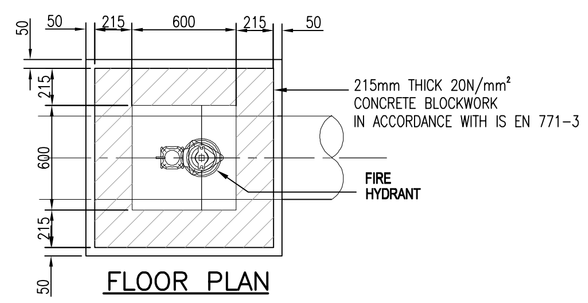

FLOOR PLAN
ON–LINE FIRE HYDRANT CHAMBER FOR POLYETHYLENE (PE) PIPE (BLOCKWORK CONSTRUCTION)
(SCALE 1:25)

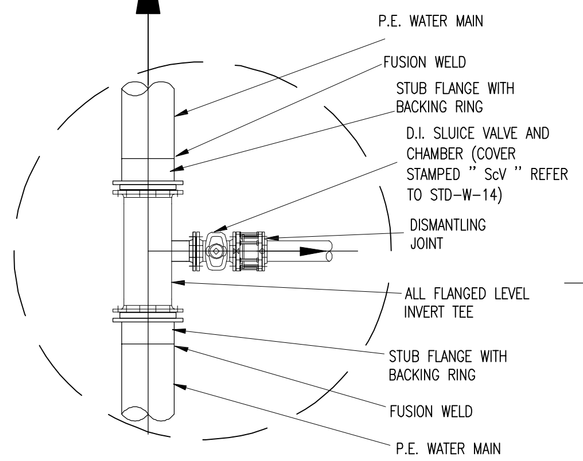

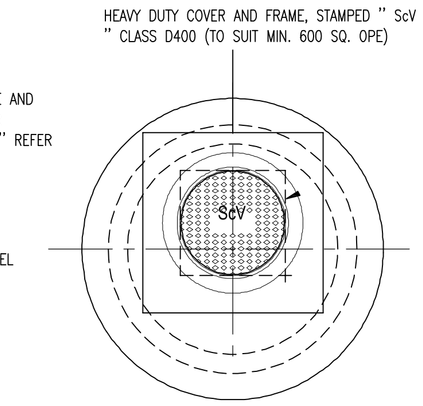

SCOUR VALVE PLAN
(POLYETHYLENE WATER MAIN)

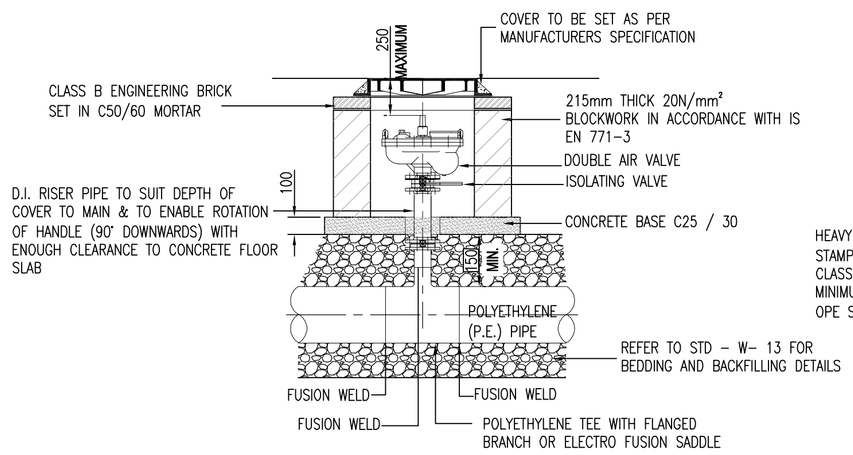

SECTION
(SCALE 1:25)

SECTION

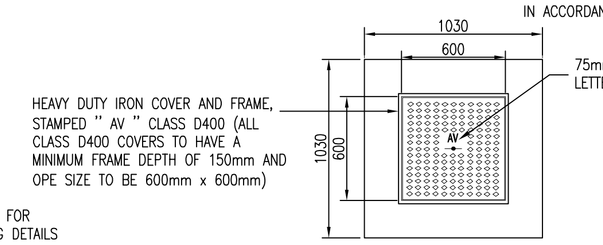

ROOF PLAN
(SCALE 1:25)

DIAMETER OF MAIN	UP TO 250 (mm)	250 TO 350 (mm)
DIAMETER OF BRANCH	80mm	100mm
BORE OF VALVE INLET	80mm	100mm

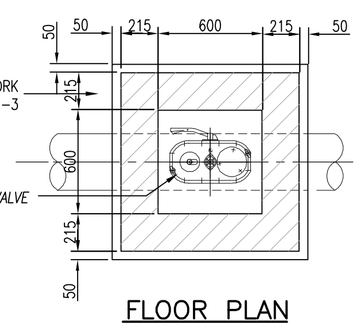

FLOOR PLAN
DOUBLE AIR VALVE FOR POLYETHYLENE (PE) PIPE (BLOCKWORK CONSTRUCTION)
(SCALE 1:25)

AIR VALVE NOTES:

1. ALL DIMENSIONS IN MILLIMETRES (mm) UNLESS NOTED OTHERWISE.
2. AIR VALVE CHAMBERS SHALL BE COVERED WITH APPROVED VENTILATED HEAVY DUTY METAL COVERS TO IS EN 124 RATING D400. COVER AND FRAME SHALL BE SUITABLE FOR ROAD AND TRAFFIC CONDITIONS AND IS SUBJECT TO THE APPROVAL OF IRISH WATER.
3. AIR VALVES SHALL BE COMPLY WITH THE REQUIREMENTS OF IS EN 1074–4, AIR VALVE SHALL BE DOUBLE ORIFICE TYPE AND SHALL INCLUDE AN ISOLATING. THE ISOLATING VALVE SHALL BE A GATE CONFORMING IS EN 1074–2 & SHALL BE OF A BOLTLESS BONNET DESIGN
4. THE AIR VALVES SHALL HAVE BODIES AND COVERS OF CAST IRON TO BS 1563 WITH FLANGES DRILLED TO PN 16 IN ACCORDANCE WITH BS EN 1092. EACH VALVE SHALL HAVE A LARGE AND A SMALL AIR ESCAPE ORIFICE WITH AN ISOLATING VALVE.
5. SERVICE CONNECTIONS SHALL NOT BE PROVIDED WITHIN 2m OF THE AIR VALVE LOCATION.
6. AIRVALVE CHAMBERS TO BE OF PRECAST CONCRETE UNITS OR HIGH DENSITY BLOCKWORK. ALTERNATIVE PROPRIETARY PREFABRICATED CHAMBER UNITS MAY ALSO BE USED, SUBJECT TO APPROVAL FROM IRISH WATER.
7. PRECAST CONCRETE CHAMBERS SHALL BE SURROUNDED BY A MINIMUM OF 150mm COMPACTED CLAUSE 808 MATERIAL AS PER STD–W–13.
8. DUCTILE IRON PIPES / FITTINGS AND PE PIPES / FITTINGS TO BE IN ACCORDANCE WITH IS EN 545 AND IS EN 12201:2011.
9. 200mm ALL AROUND, 100mm DEEP CONCRETE PLINTH WITH PROTECTIVE STAINLESS STEEL METAL BAND AROUND COVERS IN GREEN AREAS.
10. THRUST BLOCKS (NOT SHOWN ON DRAWING), TO BE PROVIDED AS PER STANDARD DRAWING STD–W–28 AT ALL TEES, BENDS, TAPERS, DEAD ENDS AND PIPES AT STEEP SLOPES.
11. ANTI CORROSION TAPE TO BE PROVIDED AROUND BURIED FLANGES.
12. THE LOCATION OF THE AIR VALVE SHALL BE THE SUBJECT OF PARTICULAR AGREEMENT WITH IRISH WATER TO ENSURE THAT THE RISK OF CONTAMINATION THROUGH THE VALVE IS ELIMINATED.
13. ALL CONCRETE TO BE IN ACCORDANCE WITH IS EN 206.

1:25 0 0.5 1.0 1.5 2.0 2.5m
1:1 0 10 20 30 40 50 60 70 80 90 100m

REV.	DATE	AMENDMENT	DRN	APPD
A	12/08/19	REVISED FOR FINAL SUBMISSION	PJD	MD

STATUS **FOR PLANNING NOT FOR CONSTRUCTION**

Waterman Moylan
Engineering Consultants
BLOCK S, EASTPOINT BUSINESS PARK, ALFIE BYRNE ROAD, DUBLIN D03 K7W7 IRELAND.
Tel: (01) 664 8900 Fax: (01) 661 3618
Email: info@waterman-moylan.ie www.waterman-moylan.ie

CLIENT GERARD GANNON PROPERTIES

ARCHITECT CONROY CROWE KELLY

PROJECT
CLONGRIFFIN
SHD APPLICATION 2

TITLE
WATERMAIN CONSTRUCTION DETAILS
SHEET 1 OF 2

DRAWN	DESIGNED	APPROVED	DATE
PJD	PJD	MD	NOV 18'
SCALE 1:25 @ A1	JOB NO. 18–059	DRG. NO. P2310	REVISION A

© 2016. This drawing is copyright. No part of this document may be re–produced or transmitted in any form or stored in any retrieval system of any nature without the written permission of the consulting engineer as copyright holder except as agreed for use on the project for which the document was originally issued.